SSS SIEDLE

Siedle Classic door station audio
CL 111-1 R-02

Page 1

Product description

Classic door station for the 6+n system with stainless steel front, brushed V4A, without housing for mounting on existing flush-mount housing "Size A, B or C" for series TL 111.

Specifications

Designation	Dimensions front panel (mm) W x H x D
CL 111-1 R-02	171 x 224 x 2
CL 111-2 R-02	171 x 277 x 2
CL 111-3 R-02	171 x 277 x 2
CL 111-4 R-02	171 x 356 x 2
CL 111-5 R-02	171 x 356 x 2
CL 111-6 R-02	171 x 356 x 2

Article information

Article designation	Article description	Colour/Material	KGSAP article no.
CL 111-1 R-02	Siedle Classic door station audio	Brushed stainless steel	D 200042891-00
CL 111-2 R-02	Siedle Classic door station audio	Brushed stainless steel	D 200042892-00
CL 111-3 R-02	Siedle Classic door station audio	Brushed stainless steel	D 200042893-00
CL 111-4 R-02	Siedle Classic door station audio	Brushed stainless steel	D 200042894-00
CL 111-5 R-02	Siedle Classic door station audio	Brushed stainless steel	D 200042895-00
CL 111-6 R-02	Siedle Classic door station audio	Brushed stainless steel	D 200042896-00

Siedle Classic door station audio
CL 111-1 R-02

Accessories

Article designation	Article description	Colour/Material	KGSAP article no.
HTA 811-0 W	Analogue in-house telephone	White	C 200039976-00
NG 402-03	Line rectifier	Black	A 200033590-00
ZNSM/CL-02	Metal Classic accessory nameplate	Others	D 200043063-00

Spare parts

Article designation	Article description	Colour/Material	KGSAP article no.
CL 02 Siedle Classic	Complete button without circuit board	Others	E 200044537-00
CL 02 Siedle Classic	Nameplate upper part call button	Clear glass	E 200029966-00
CL 02-1 Siedle Classic	Button circuit board	Others	E 200044533-00
CL 02-2 Siedle Classic	Button circuit board	Others	E 200044534-00
CL 02-3 Siedle Classic	Button circuit board	Others	E 200044535-00
CL 02-4 Siedle Classic	Button circuit board	Others	E 200044536-00
TL 111/411-...	Bit for Portavox dual-hole screws	Others	E 210007473-01

Siedle Classic door station audio
CL 111-1 R-02

Page 3

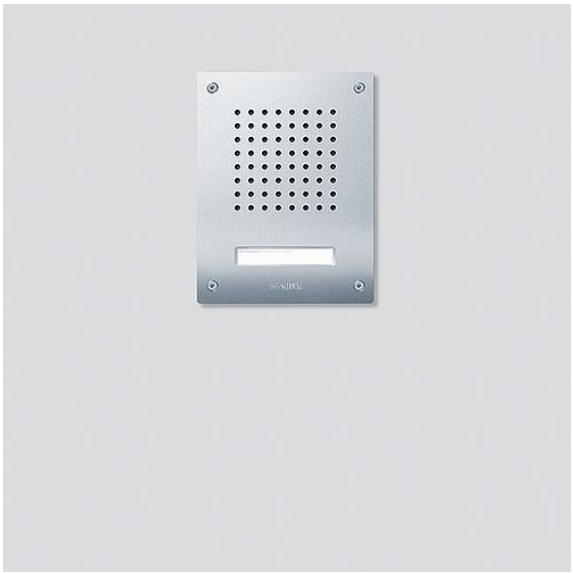

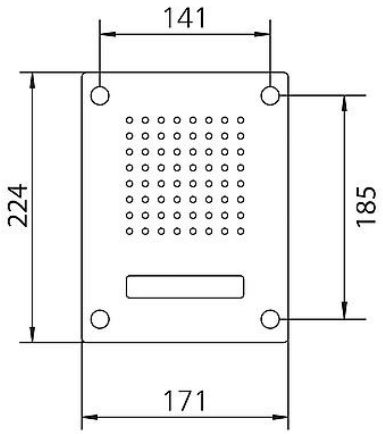

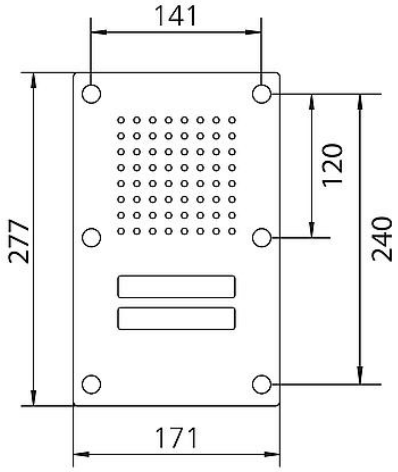

Siedle Classic door station audio
CL 111-1 R-02

Page 4

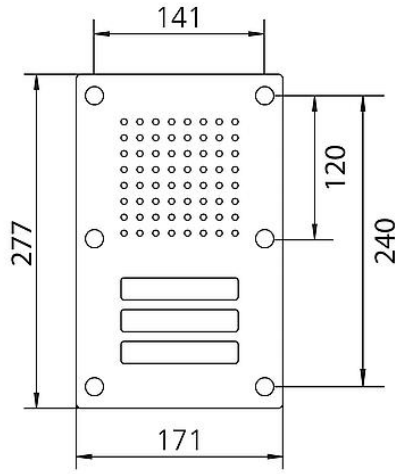

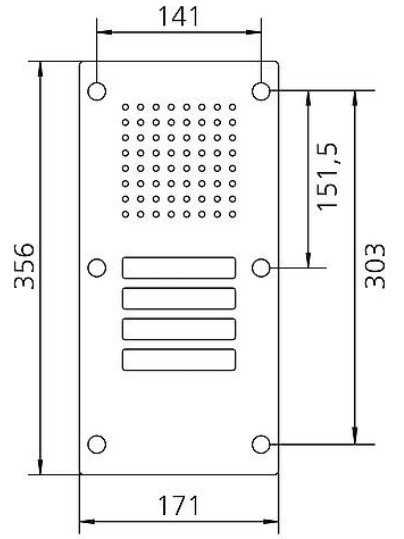

Siedle Classic door station audio
CL 111-1 R-02

Page 5

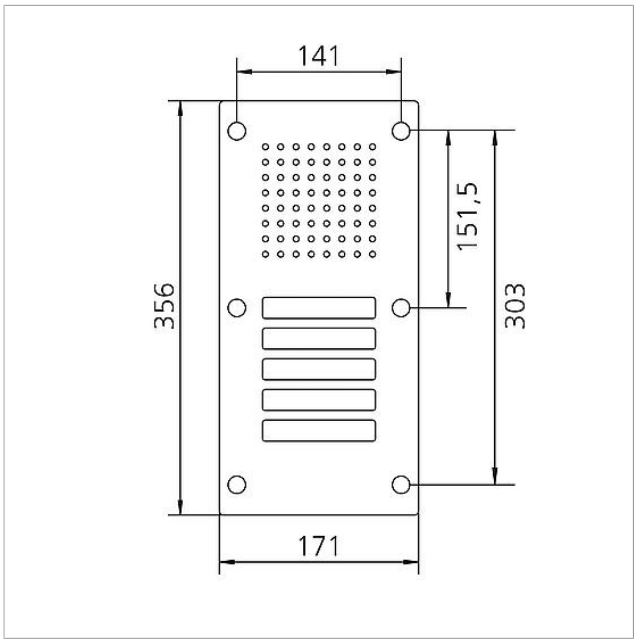

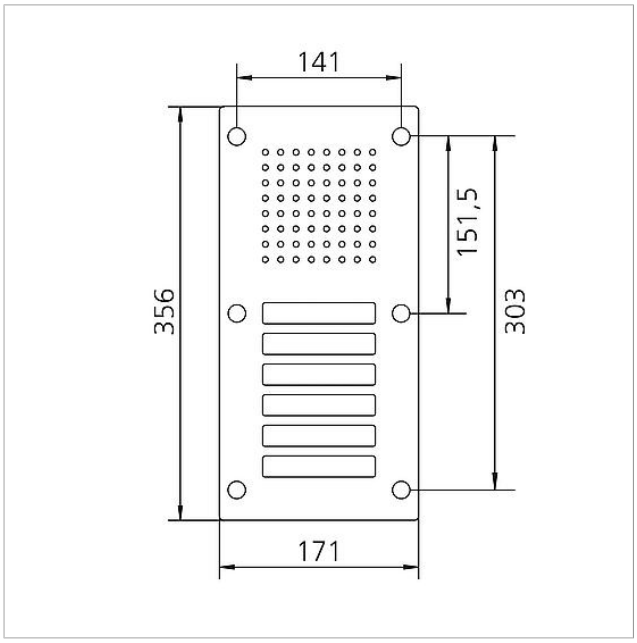

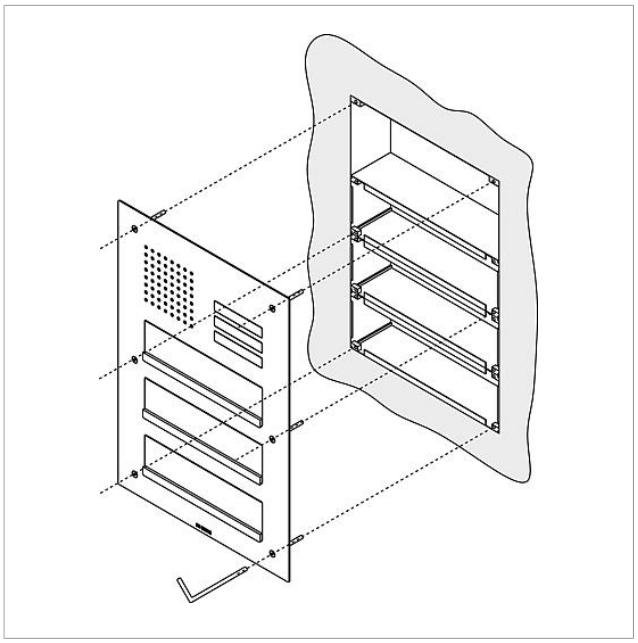

Siedle Classic door station audio
CL 111-1 R-02

Page 7

CL 111-1...6 R-02 & CL 411 BD2A 01...03 R Classic door station	Product information	1,2 MB	Download
Information and tips on care and cleaning	Product information	327 kB	Download
	System manual	1,6 MB	Download
Siedle Classic -02	Declaration of Conformity	7,7 MB	Download
	Additional information	109 kB	Download